Data Sheet

Article number: 2301079021
Description: E+G Handwheel
VRTP.375+I-A26

Measures

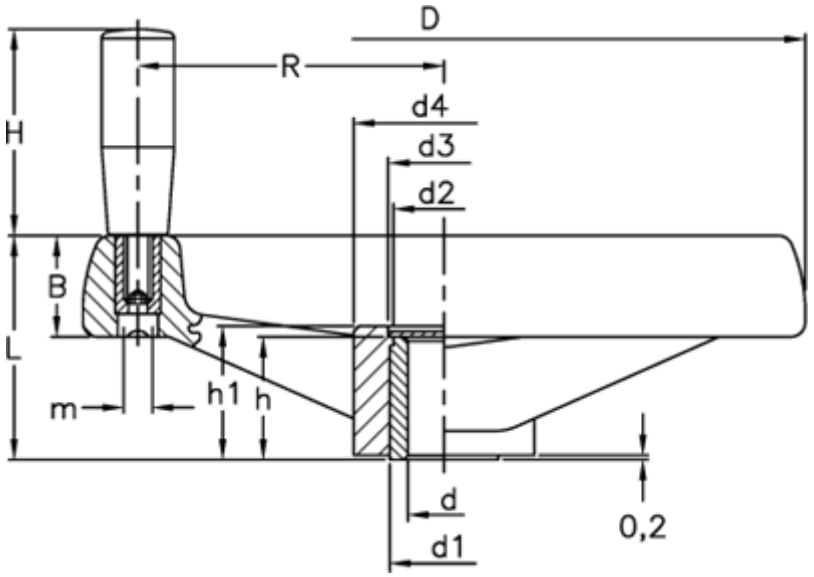

B	= 38	H	= 90
C (N m)	= 480	h	= 43
D	= 373	h1	= 46
d1	= 40	L	= 82
d2	= 37	L (J)	= 40
d3	= 42	m	= M10
d4	= 69	R	= 162
d H7	= 26		

Product drawings and brochures of any kind may contain errors for which Brd. Klee A/S cannot be liable.